IE1216 Inductive proximity sensor Plastic housin∅ 34 High temperature type M12 Connector Size 95mm Sensing range 20mm[nf] Non-flush	
Electric design	AC/DC
Output	NC
Operating voltage[V]	20…250 AC/DC
Current loading[mA]	350
Short-circuit protection	否
Overload protection	否
Voltage drop[V]	< 6 AC / < 5.5 DC
Consumed Current[mA]	< 2.5 (250 V AC) / < 1.3 (110 V AC) / < 0.8 (24 V DC)
Real sensing range[mm]	20±10%
Operating range[mm]	0…16
Switch-point drift[%/Sr]	-10…10
Hysteresis[%/Sr]	1…15
Switching frequency[Hz]	25 AC / 50 DC
Adjustment factors	low carbo steel=1 / stainless steel approx.0.7 / brass approx.0.5 / Alumium approx.0.4 / copper approx.0.3
ESD[KV] EN61000-4-2	6kV III
EFT[KV] EN61000-4-4	2kV III
Walkie talking experiment[mm]	<1
Operating temperature[℃/℉]	-25…80
Protection classification	IP67
Dimension[mm]	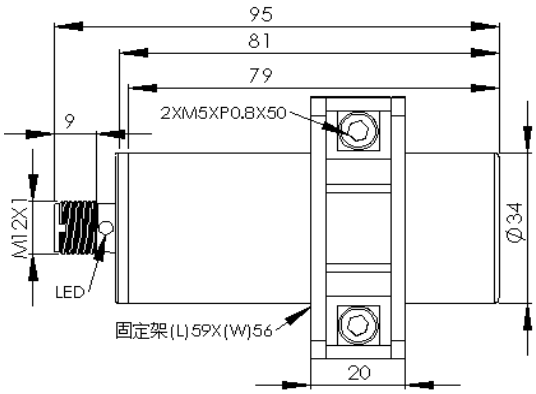
Housing material	PBT+GF
Function display switching status LED	Red(90°)
Connection	M12 Connector
Wring Core color 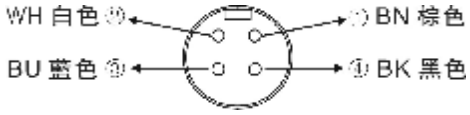	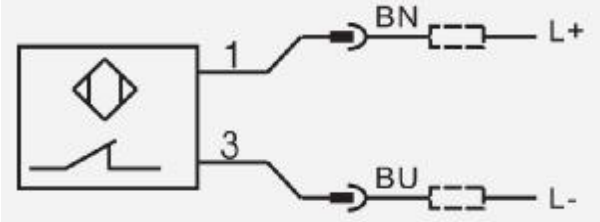
Accessory(Included)	Mounting clamp